# MT 22300 series

## _Thermocouple connections

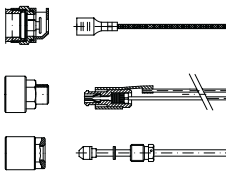


## _ Construction characteristics

- Mechanical body: drop forged brass.
- Male cone: bar-cut brass.
- Spindle: bar-cut brass.
- Cover: drop forged steel.

## _ Functional characteristics

- Maximum temperature: 150 ºC
- Maximum bulb temperature: 320 ºC
- Oven temperature adjustment field
  - Maximum: 300 ºC
  - Minimum: that allowed by the burner.
- Thermostatic adjustment type: modulating.
- Maximum flow: limited by the thermostat or oven injector.
- Minimum flow: limited by thermostat by-pass. By-pass adjustable for each type of gas.
- Flows between maximum and minimum: determined thermostatically.
- Maximum gas pressure: 65 mbar

## _Connection characteristics

- Inlet types:
  - For round rails with 16, 18 and 21 mm diameter.
  - For square rails.
  - For round / square rails with flange.
  - On demand and after a study, other types and dimensions.
- Outlet types: according to customer requirements.
- Spindle dimensions: according to customer requirements.
- Other dimensions: according to customer requirements.

## _Installation characteristics

- The flange screws: max. 0.3 m Kp
- The thermostat to the gas collector pipe: max. 1 m Kp
- The gas outlet nuts: max. 1.5 m Kp
- The thermocouple connector: max. 0.4 mKp
- Min. bending radius: capillary pipe 15 mm/thermocouple 25 mm
- Min. straight thermocouple length from connection to thermostat: 15 mm

## _Main outside dimensions

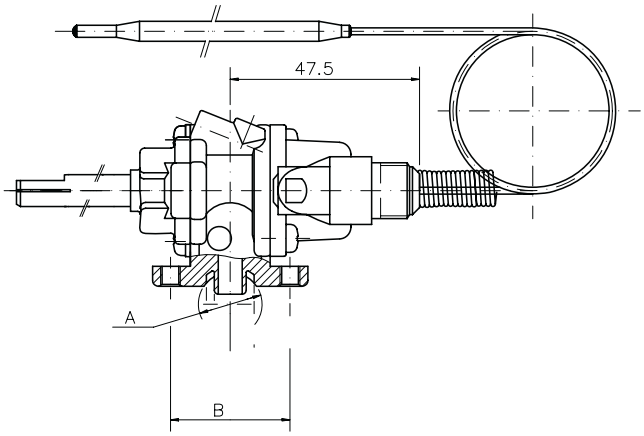


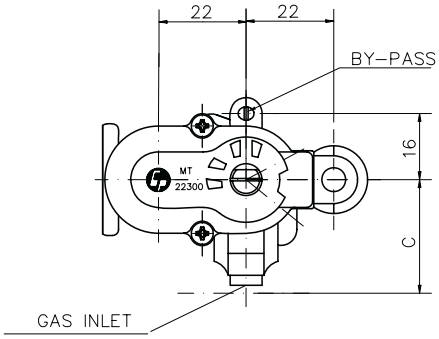


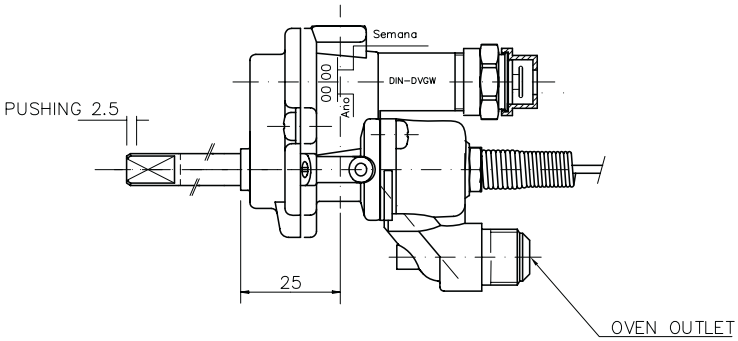


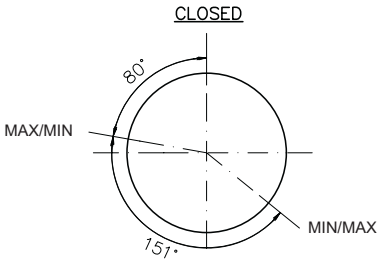


* Other versions available upon request.